DRIVE TECHNOLOGY

INDIVIDUAL PRODUCT SOLUTION

Please contact us for your individual brake.

Precision as passion

Certified management systems ISO 9001 and ISO 14001

PRECIMA Magnettechnik GmbH
Röcker Str. 16
D-31675 Bückeburg
Tel.:+49 (0) 5722-89332-0
Fax.:+49 (0) 5722-89332-2
E-Mail:info@precima.de
www.precima.de

2024 - v1.01

PRECIMA MAGNETTECHNIK GMBH

BORSERINI

EN



FDW

Spring-applied brake

PRECIMA
MAGNETTECHNIK GMBH

EN

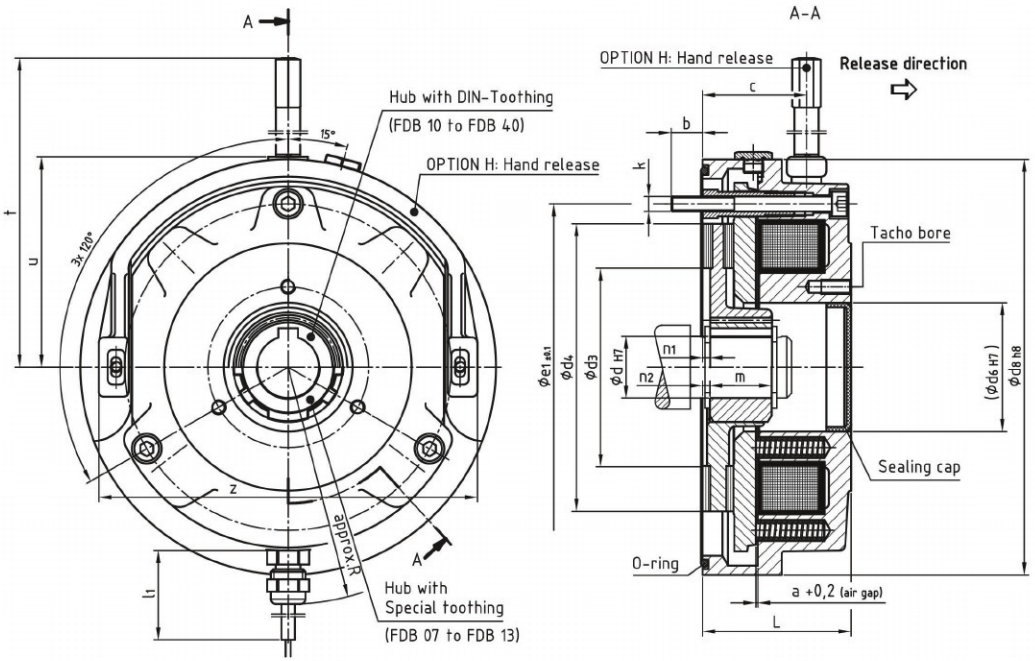

FACTS

- Closed standard brake
- Working or holding brake
- Sealed against external influences
- Protection class IP 66
- Easy to assemble and low maintenance
- Ambient temperature -20°C bis +40°C

OPTIONS

- Handrelease (optionally lockable)
- Mounting flange
- Threaded holes for encoder attachment (tachobores)
- Anti-condensation heater
- Microswitch (function- and wearcontrol)
- Inductiv sensor (functioncontrol)
- ATEX zone 22
- Z-lamella with continuous shaft
- Customized versions on request

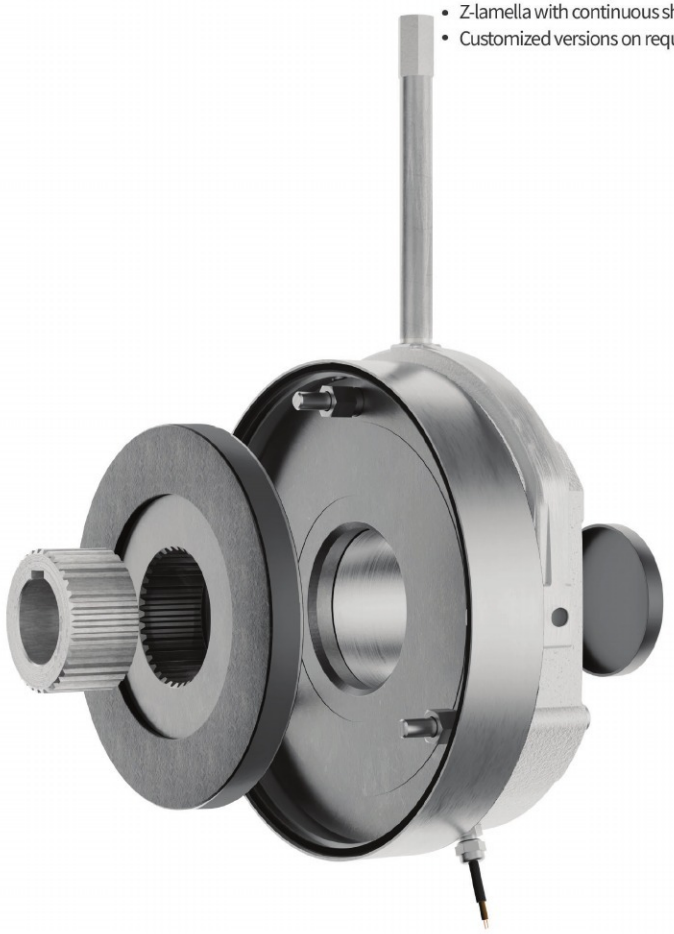

Size	Nominal braking torque Mb N [Nm]	P [W] @ 20°C	a	b	c	ød H7	ød3	ød4	ød6	ød8	e±0,1	L	l1	k	m	n1	n2	ca.R	t	u	z
07	1 - 5	20	0,15	6,5	15,5	11/12/15*	42,1	57	25	84	66	38	400 bis 1000	3xM4	18	-	0,5	-	97	49,5	76
08	2 - 7,5	33	0,2	6	30	11/12/15*	42,1	60	26	98	72	40		3xM4	18	1,5	0,5	54	100	55	89
10	4 - 15	42	0,2	8,5	43,5	11/12/15*	50	78	32	120	90	48		3xM5	20	2,5	1	65	110	65	111
13	8 - 30	50	0,3	12	39	15/20	62	96	42	145	112	53,5	400 bis 1500	3xM6	20	3,5	1,5	79	135	75	132
15	17 - 60	63	0,3	13	42	20/25	80	118,5	52	168	132	60		3xM6	25	3	-	89	140	85	151
17	26 - 90	75	0,3	14	46	25/30/35x	84	127,5	62	188	145	70		3xM8	30	3	-	98	165	97	172
20	42 - 150	96	0,4	14	51,5	30/35/40	94	127,5	72	213	170	80		3xM8	30	3	-	110	186	116	196
23	65 - 225	114	0,4	15	58	35/40/45	120	152	80	245	196	90		3xM8	35	4	-	125	204	128	224
26	125 - 375	150	0,5	19	62	40/45/50/55*	130	204	90	276	230	99		3xM10	40	4	-	140	285	148	258
30	200 - 600	210	0,5	17	64	50/60/65*	180	255	115	324	278	105		6xM10	50	4	-	164	310	175	304

Changes and errors expected
Dimensions in mm, standard keyway according to DIN 6885 / 1-JS9
* Keyway according to DIN 6885 Bl.3

OFFICIAL PRECIMA DISTRIBUTOR IN ITALY & THE UNITED STATES
BORSERINI S.R.L.: PHONE +39 0342 209200 EMAIL PRECIMA@BORSERINI.IT
BORSERINI INDUSTRIAL TRADING LLC: PHONE +17045473285 EMAIL BIT-PRECIMA@BORSERINI.COM

FDW
Spring-applied brake