FDW Spring loaded brake IP 66

Through the FDW body design this is a fully capsulated brake sealed from outside influence. The brake type available in 10 sizes counts as solid industrial brake for outdoor applications or use in aggressive enviorment. Very easy assembling through fixed air gap.

Options:

- sealed manual hand release
- taped bores for encoder/tacho assembly
- rest period heating
- temperature feeler
- inductive sensor / Sensor for monitoring brake or wear limit

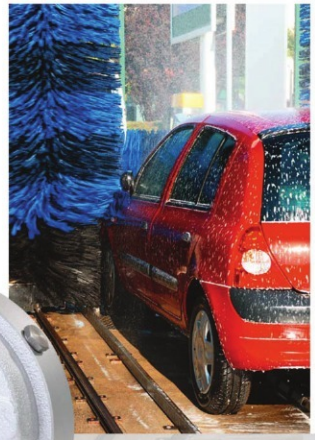



Company Information


Headquarters and Assembly Line at Bückeburg-Röcke


Plant - CNC Production at Bückeburg-Müsingen


Plant - Helpsen

PRECIMA Magnettechnik GmbH was founded in the year 1981 and is today established as an independent, medium sized, innovative family owned brake manufacturer. With our staff of more than 160 employees we develop and produce a wide range of electro-magnetic operated brakes and clutches for all kinds of applications in machine and other industries. Our standard range of products covers a performance scope of braking torques between 0.5 and 1,600 Nm.

Thanks to our advanced CNC machining technology and well organized assembly lines we produce more than 550,000 units per year. The high rate of self manufactured parts provides us with a maximum of flexibility and allows for short response times.
Our own highly qualified and experenced engineering and development departments are specialized in producing customized brake solutions on a very high technical and economic standard.

PRECIMA MAGNETTECHNIK GmbH
Röcker Straße 16
31675 Bückeburg / Germany
Tel.: ++49(0)5722 89332-0
Fax: ++49(0)5722 89332-2
E-Mail: info@precima.de

www.precima.de

OFFICIAL PRECIMA DISTRIBUTOR IN ITALY & THE UNITED STATES
BORSERINI S.R.L.: PHONE +39 0342 209200 EMAIL PRECIMA@BORSERINI.IT
BORSERINI INDUSTRIAL TRADING LLC: PHONE +17045473285 EMAIL BIT-PRECIMA@BORSERINI.COM

PRECIMA MAGNETTECHNIK GMBH



FDW
Spring loaded brake
IP 66

www.precima.de

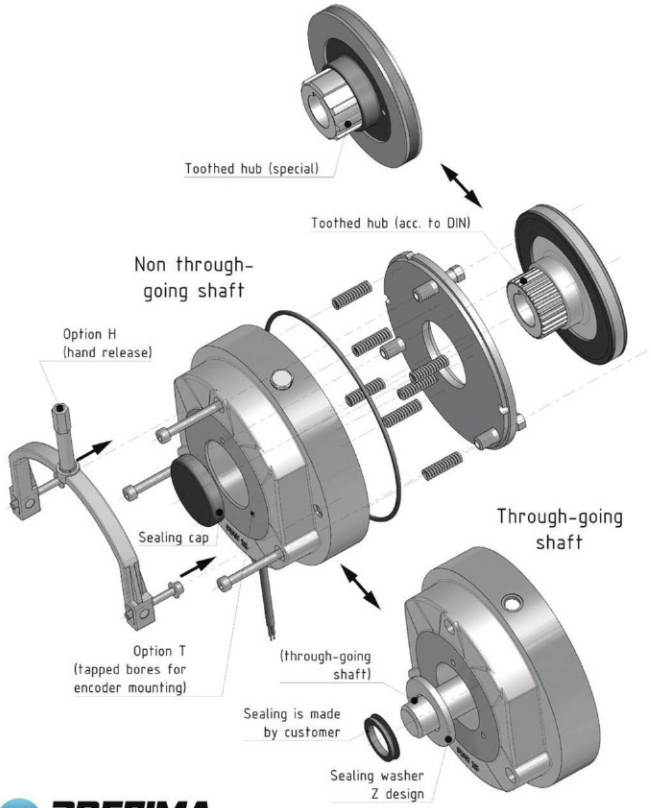

PRECIMA MAGNETTECHNIK GMBH

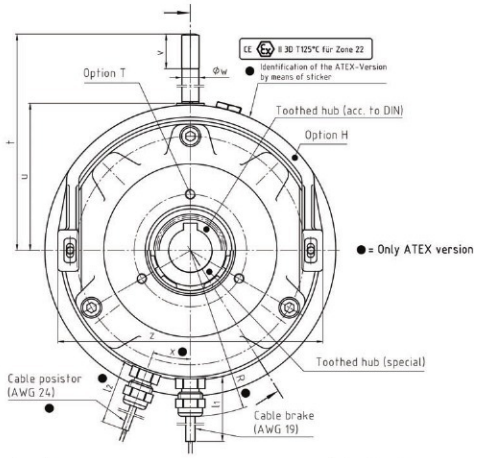

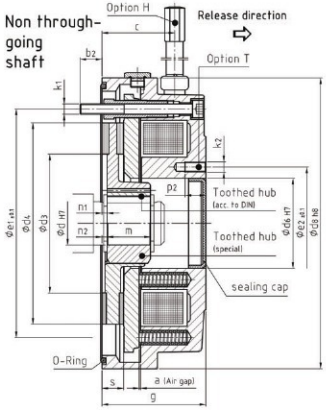

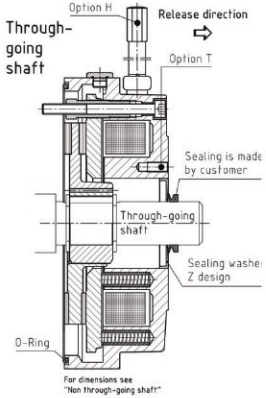

Size	Braking torque M_b [Nm]***	P 20 °C (Watt)	a	b2	c	Hub diameter d H7: Toothed hub (special)	Hub diameter d H7: Toothed hub (acc. to DIN)
08	5**	29	0,2 +0,2	6	30	11/14*/15*	-
10	10**	40	0,2 +0,2	8,5	43,5	15/19*/20*	14/15
13	20**	49	0,3 +0,2	12	39	15/20/25	15/20
15	40**	59	0,3 +0,2	13	42	-	20/25/30
17	60**	87	0,3 +0,2	14	46	-	25/30/35*
20	100**	110	0,4 +0,2	14	51,5	-	30/35/40
23	150**	101	0,4 +0,2	15	58	-	35/40/45
26	250**	140	0,5 +0,2	19	62	-	40/45/50/55*
30	400**	189	0,5 +0,2	17	64	-	50/55/60/65*

Size	d3	d4	d6 H7	d8 h8	e1 ±0,1	e2 ±0,1	g	k1	k2
08	42	61,5	26	98	72	34	40	(3 x) M4	(3 x) M4
10	50	78	32	120	90	40	48	(3 x) M5	(3 x) M5
13	62	98	42	145	112	54	53	(3 x) M6	(3 x) M6
15	80	118,5	52	168	132	65	60	(3 x) M6	(3 x) M6
17	84	127,5	62	188	145	75	70	(3 x) M8	(3 x) M8
20	94	152	72	213	170	85	80	(3 x) M8	(3 x) M8
23	120	178	80	245	196	95	90	(3 x) M8	(3 x) M8
26	130	204	90	276	230	110	99	(3 x) M10	(6 x) M10
30	180	255	115	324	278	138	105	(6 x) M10	(6 x) M10

Size	l1	l2 *	m	n1	n2	p2	R *	s (new)	t	u	v	w	x *	z
08	400	400	18	1,5	0,5	8	54	7,5 -0,1	100	55	15	8	25°	89
10	500	500	20	2,5	1	12	65	8,5 -0,1	110	65	15	8	25°	111
13	500	500	20	3,5	1,5	12	79	10,3 -0,1	135	75	20	10	25°	132
15	600	600	25	3	-	12	89	12,5 -0,1	140	85	20	10	20°	151
17	600	600	30	3	-	15	98	14,5 -0,1	165	97	25	12	20°	172
20	600	600	30	3	-	15	110	16,0 -0,1	186	116	25	12	20°	196
23	600	600	35	4	-	15	125	18,0 -0,1	200	128	25	12	20°	224
26	600	600	40	4	-	25	140	20,0 -0,1	285	148	35	19	20°	258
30	600	600	50	4	-	25	164	20,0 -0,1	310	175	35	19	20°	304

Standard keyway in accordance to DIN 6885/1-JS9
* Keyway in accordance to DIN 6885/3-JS9
** Standard braking torque (working brake)
Standard braking torque (holding brake): ca. 1,5 * M_b
*** Permissible deviations of Mb:
Working brake: -30% (new) // ±20% (run-in)
Holding brake: ±20% (new) // -10% / +30% (run-in)

Dimensions in mm
+ only ATEX version