DRIVE TECHNOLOGY

INDIVIDUAL PRODUCT SOLUTION

Please contact us for your individual brake.

Precision as passion

Certified management systems ISO 9001 and ISO 14001

PRECIMA Magnettechnik GmbH
Röcker Str. 16
D-31675 Bückeburg
Tel.:+49 (0) 5722-89332-0
Fax.:+49 (0) 5722-89332-2
E-Mail:info@precima.de
www.precima.de

2024 - v1.01

PRECIMA MAGNETTECHNIK GMBH

BORSERINI

EN



FDB

Spring-applied brake

PRECIMA
MAGNETTECHNIK GMBH

EN

FACTS

OPTIONS

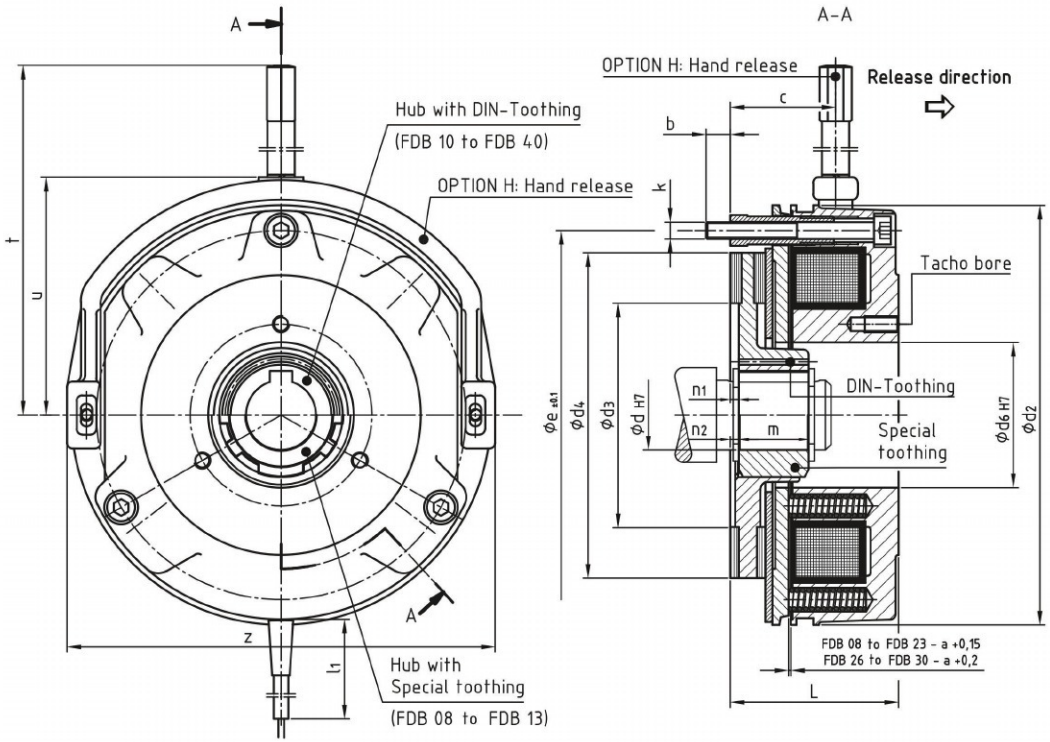

- Reliable and robust working or holding brake
- Ideal for modular systems
- Available in version **C** (adjustable braking torque) or **N** (T) (fixed braking torque with or without speedometer holes)
- Protection class IP 54 when mounted under an engine fan cover
- Ambient temperature -20°C up to +40°C

- Noise reduced
- Handrelease (optionally lockable)
- Friction plate
- Mounting flange
- Dust protection ring
- Microswitch (function- or wearcontrol)
- Inductive sensor (function control)
- Temperature sensor
- Anti-condensation heater
- Protection class IP 55 when mounted under an engine fan cover
- Threaded holes for encoder attachment (tachobores)
- Customized versions on request



Size	Nominal braking torque Mb N [Nm]	P [W] @ 20°C	a	b	c	ød H7	ød2	ød3	ød4	ød6	e±0,1	L	l1	k	m	n1	n2	t	u	z
08	2 - 7,5	22	0,2	6	20	11/12/15*	85	42,1	59,8	26	72	38,3	400 bis 1000	3xM4	18	1,5	0,5	100	55	89
10	4 - 15	28	0,2	7	21	11/12/15*	105	50	78	32	90	47,7		3xM5	20	2,5	1	110	65	111
13	8 - 30	34	0,3	9	33	15/20	130	62	95,5	42	112	53,1		3xM6	20	3,5	1,5	135	75	132
15	17 - 60	42	0,3	9	38	20/25	150	80	117	52	132	60,3		3xM6	25	3	-	140	85	151
17	26 - 90	50	0,3	11	42	25/30/35x	170	82	126	62	145	69,8		3xM8	30	3	-	165	97	172
20	42 - 150	76	0,4	11	48	30/35/40	195	94	152	72	170	80,4	400 bis 1500	3xM8	30	3	-	186	116	196
23	65 - 225	76	0,4	11	53	35/40/45	225	120	178	80	196	89,8		3xM8	35	4	-	204	128	224
26	125 - 375	325	0,5	11	58	40/45/50/50*	258	130	204	90	230	98,9		3xM10	40	4	-	285	148	258
30	200 - 600	140	0,5	12,5	60	50/60/65*	306	179	253	115	278	104,5		6xM10	50	4	-	310	175	304
40	800 - 1500	144	0,6	18	69	65/70/75/80	400	256	327	150	360	120,6		6xM12	70	4	-	415	230	403

Changes and errors expected
Dimensions in mm, standard keyway according to DIN 6885 / 1-JS9
* Keyway according to DIN 6885 Bl.3

BORSERINI

OFFICIAL PRECIMA DISTRIBUTOR IN ITALY & THE UNITED STATES
BORSERINI S.R.L.: PHONE +39 0342 209200 EMAIL PRECIMA@BORSERINI.IT
BORSERINI INDUSTRIAL TRADING LLC: PHONE +17045473285 EMAIL BIT-PRECIMA@BORSERINI.COM

FDB
Spring-applied brake