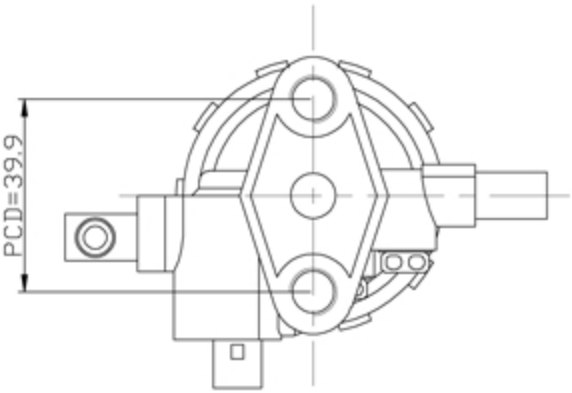
PCD=39.9

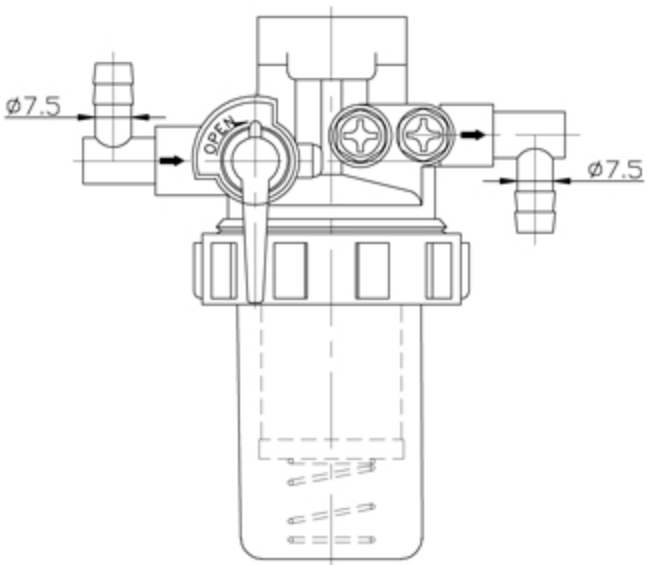
ø7.5
OPEN
ø7.5

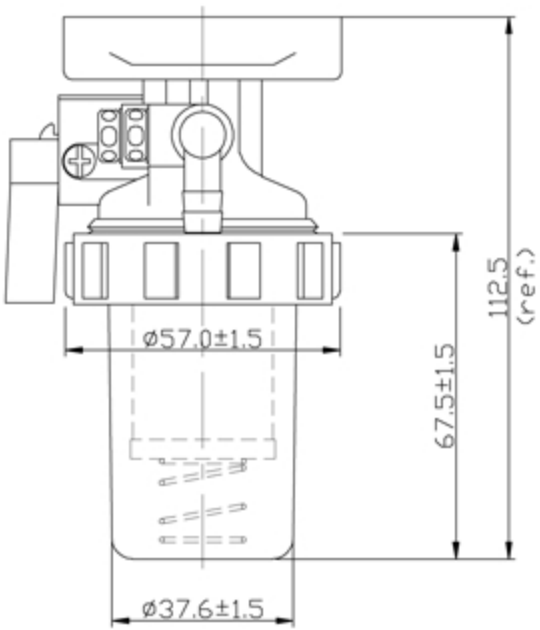
ø57.0±1.5
67.5±1.5
112.5
(ref.)
ø37.6±1.5