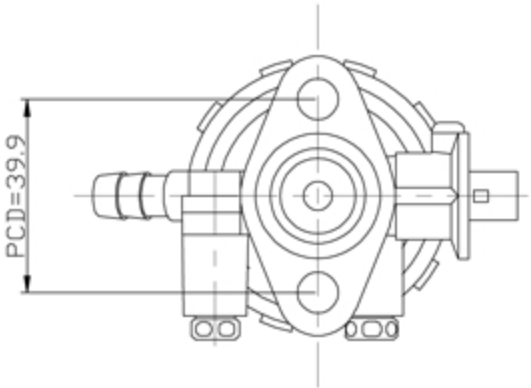
PCD=39.9

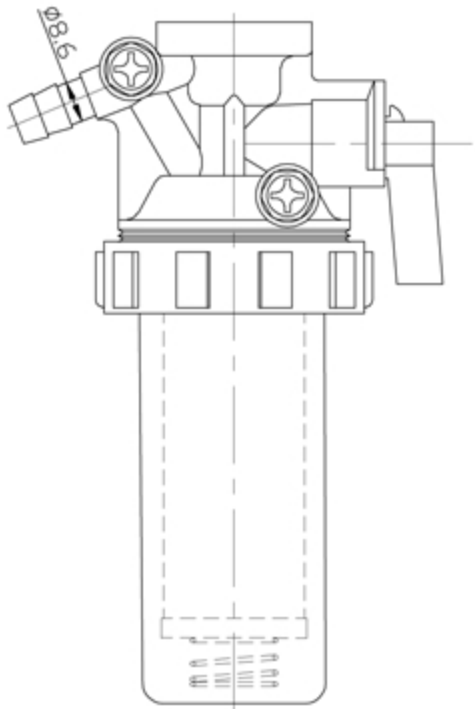
ø8.6

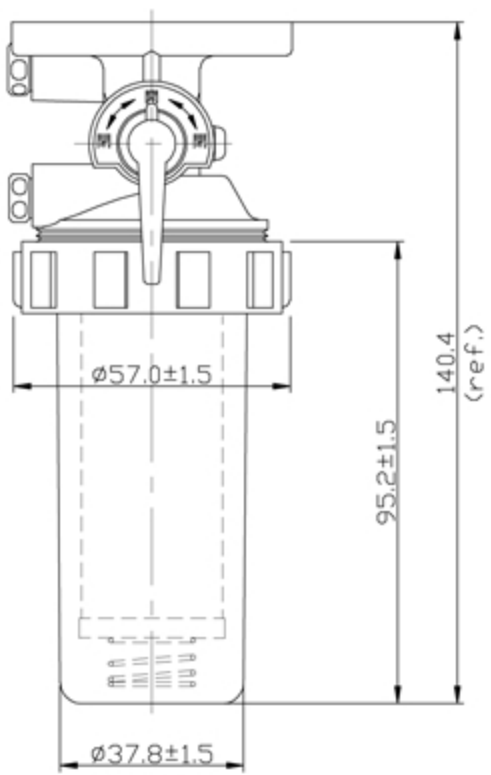
ø57.0±1.5
95.2±1.5
140.4
(ref.)
ø37.8±1.5