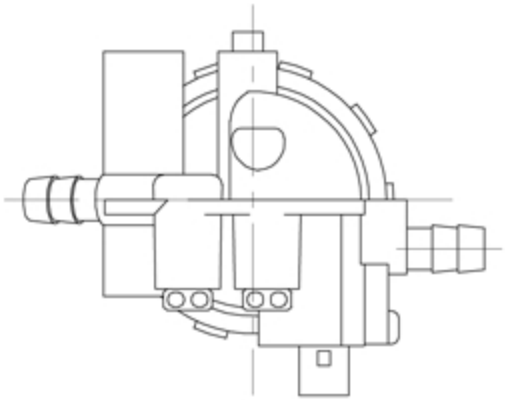

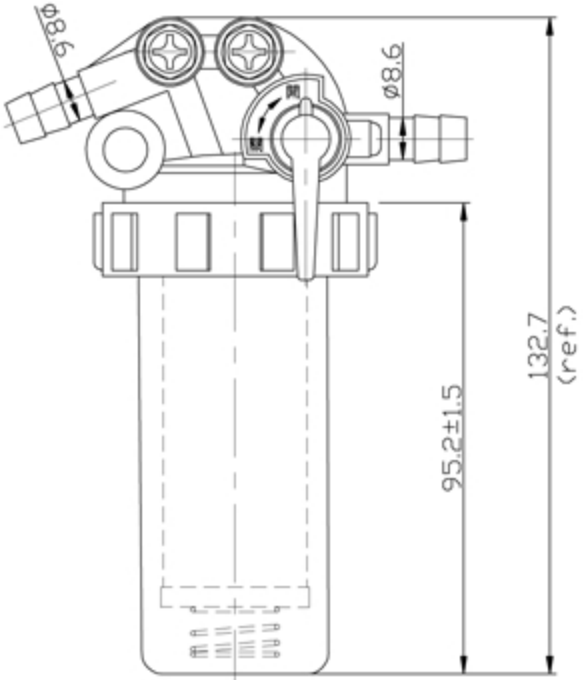
ø8.6
ø8.6
132.7
(ref.)
95.2±1.5

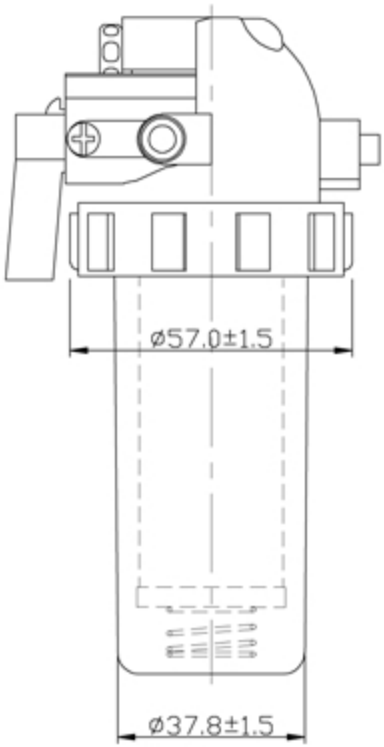
ø57.0±1.5
ø37.8±1.5