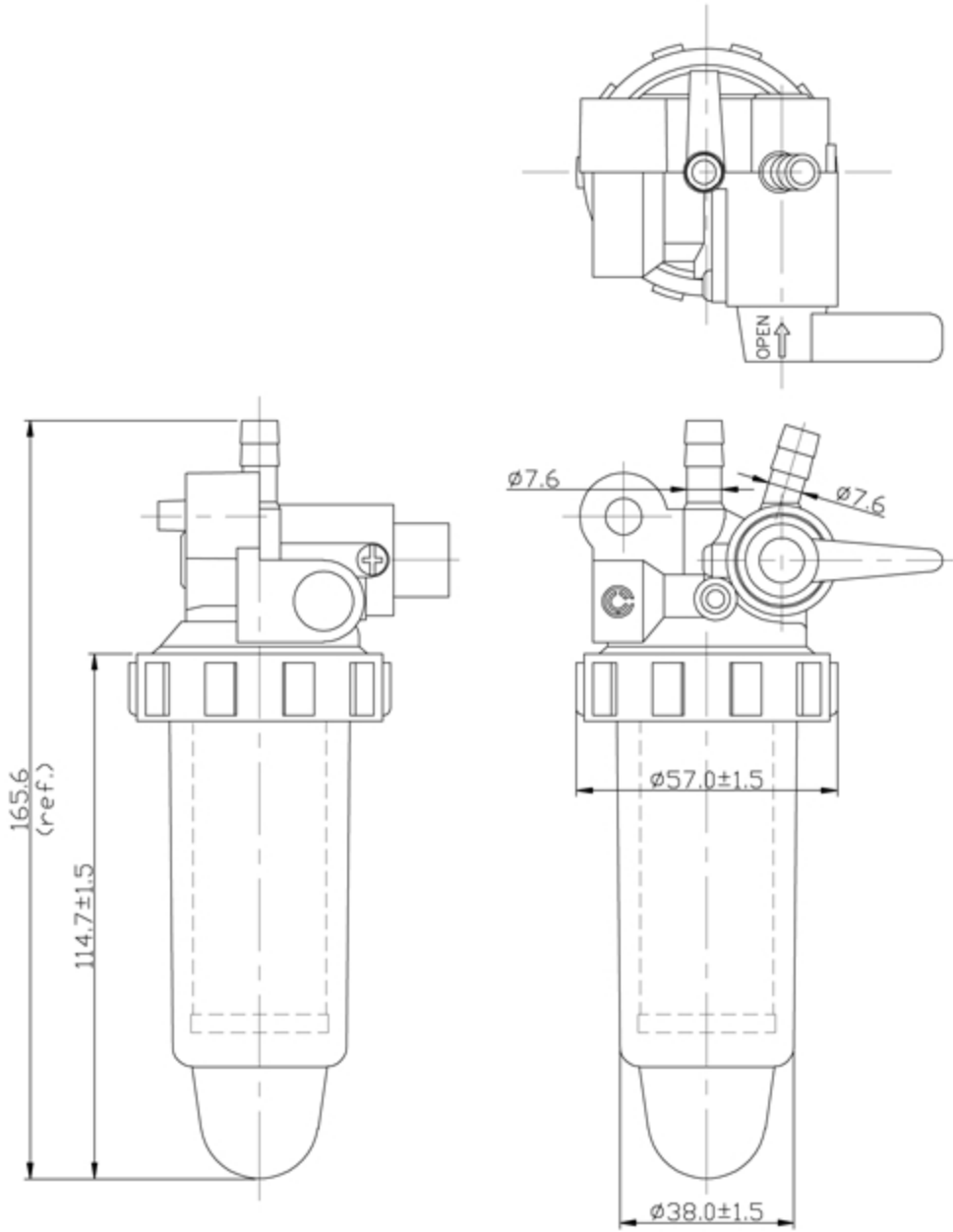
OPEN
ø7.6
ø7.6
165.6
(ref.)
114.7±1.5
ø57.0±1.5
ø38.0±1.5